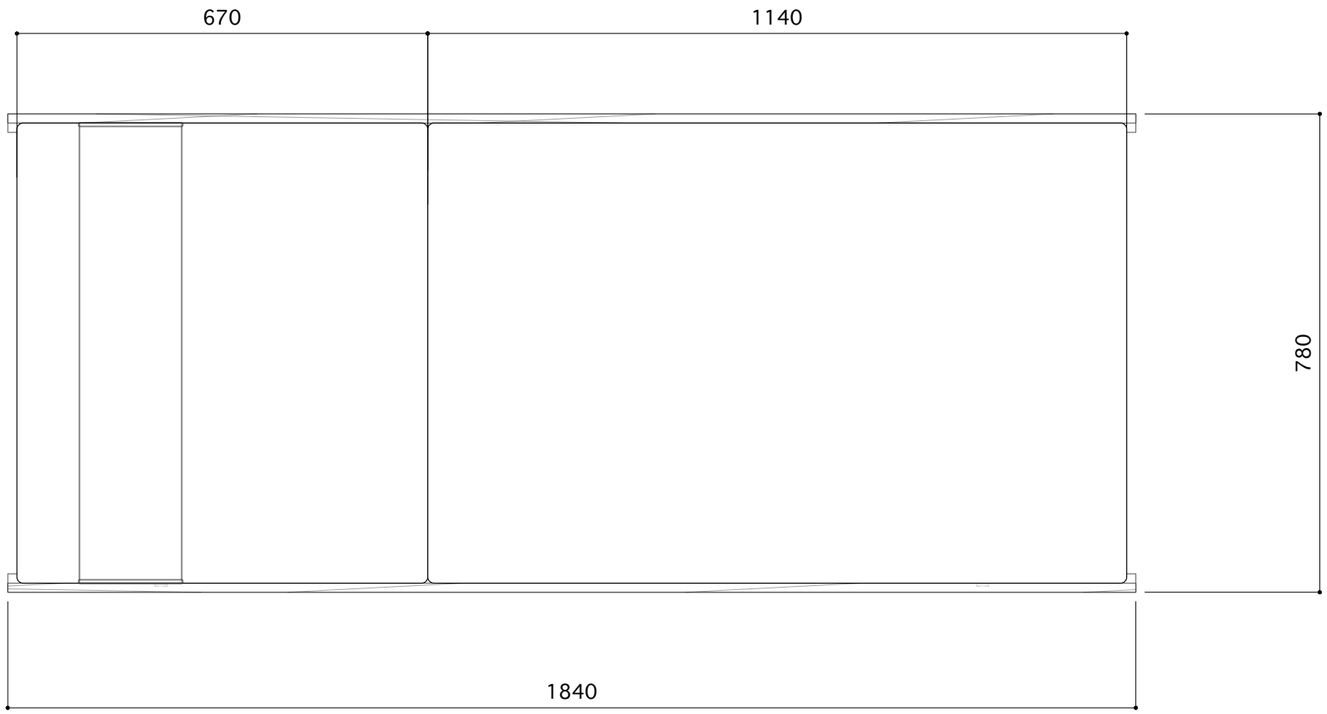

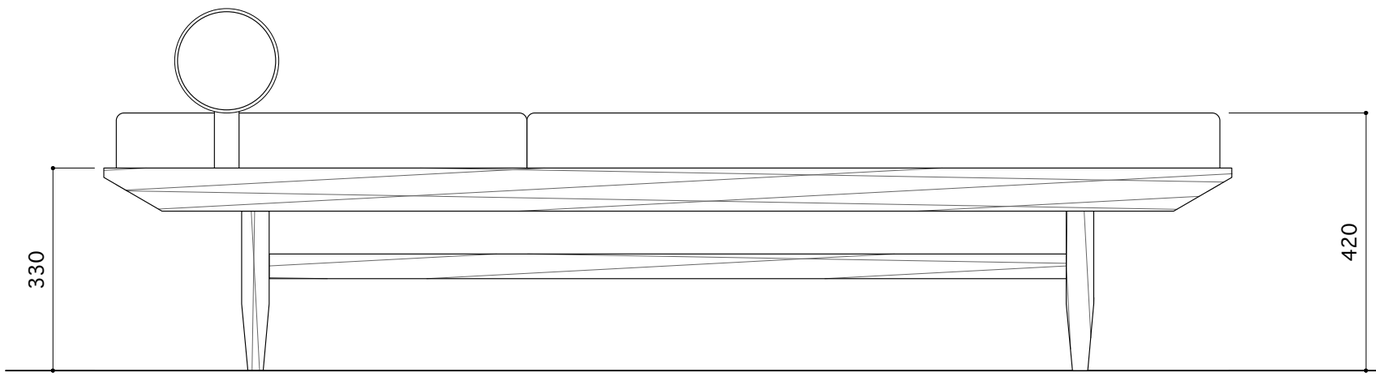

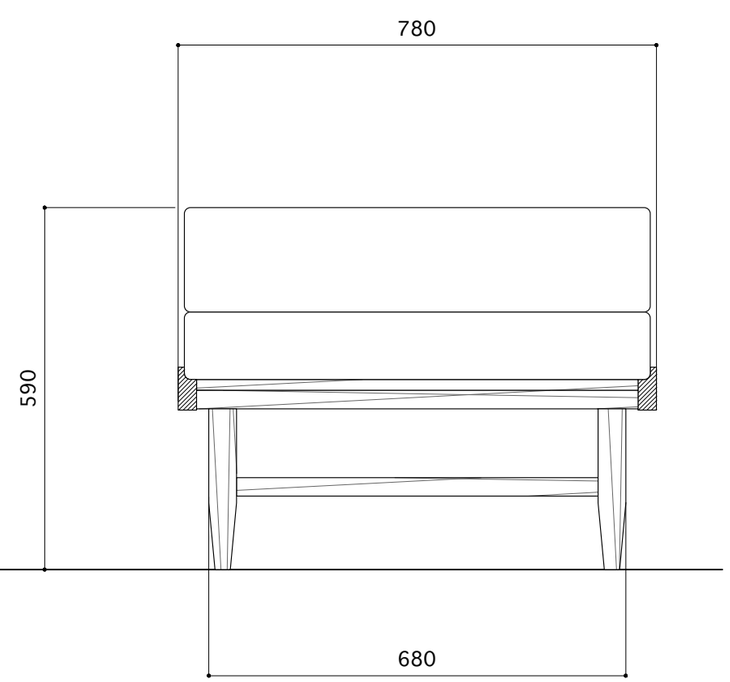

PROJECT AJIM

TITLE sesta day bed